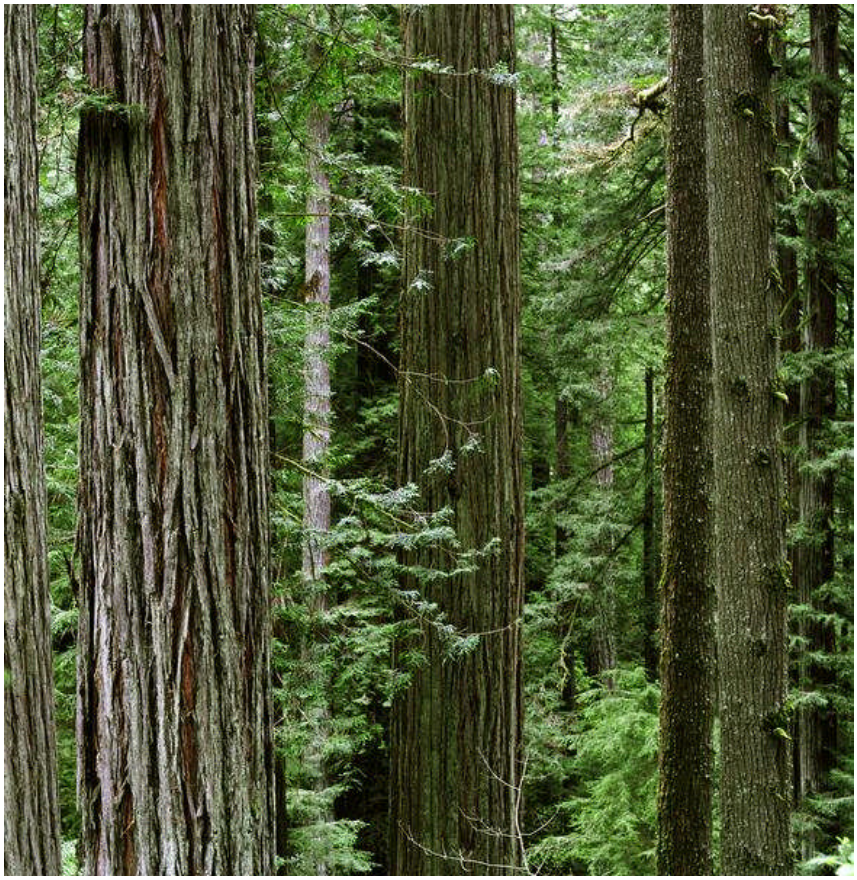

Guidance for classifying products under the Lumber Assessment

Board of Forestry and Fire Protection- 2013

Full 12.2

P.O. Box 944246
SACRAMENTO, CA 94244-2460
(916) 653-8007
(916) 653-0989 FAX
Website: www.bof.fire.ca.gov

I. FINDINGS OF THE LEGISLATURE:

Public Resources Code Section 4629 provides the following legislative findings and declarations in support of the lumber products assessment:

(a) A thriving in-state forest products sector provides public benefits, including employment opportunities in both rural and urban areas, and economic development for rural communities.

(b) Enabling continued economically viable production of forest products can help to protect the state's forest lands from conversion to other uses.

(c) The state's forest practice regulations provide for environmental protection of the state's air, water, habitat, and soil resources.

(d) Consumers of wood products in the state currently do not directly pay for the state's forest practice program and the costs of protecting the state's natural resources.

(e) Current in-state producers of wood products already bear a significant cost of conforming with the state's environmental laws, which economically disadvantages those producers relative to out-of-state production.

(f) Conforming with the state's environmental laws ensures that wildlife, habitat, clean air, forest, and water quality receive some protection.

The Legislature declared its intent in enacting the lumber products assessment portion of AB 1492, as stated in Public Resources Code Section 4629.2. Among other things, it is the Legislature's intent that the lumber products assessment achieves the following objectives:

(b) Ensure continued sustainable funding for the state's forest practice program to protect the state's forest resources, and replace the current piecemeal funding structure with a single funding source.

(c) Support in-state production of timber within the state's environmental standards, and promote and encourage retention of forests and forested landscapes.

(d) Create a funding source for the restoration of the state's forested lands and promote restoration of fisheries and wildlife habitat and improvement in water quality.

II. PUBLIC RESOURCES CODE

Under statute, certain items are expressly included in the assessment, while others are not. PRC 4629.5 states:

*"(a) (1) On and after January 1, 2013, there is hereby imposed an assessment on a person who purchases **a lumber product or an engineered wood product** for the storage, use, or other consumption in this state, at the rate of 1 percent of the sales price."*

PRC 4629.3 then defines lumber product and engineered wood product thusly:

"(3) "Engineered wood product" means a building product, including, but not limited to, veneer-based sheeting material, plywood, laminated veneer lumber (LVL), parallel-laminated veneer (PLV), laminated beams, I-joists, edge-glued material, or composite material such as cellulosic fiberboard, hardboard, decking, particleboard, waferboard, flakeboard, oriented strand board (OSB), or any other panel or composite product where wood is a component part, that is identified in regulations adopted by the board pursuant to Section 4629.4. For purpose of this paragraph, an "engineered wood product" shall only include products that consist of at least 10 percent wood.

(5) "Lumber product" means a product in which wood or wood fiber is a principal component part, including, but not limited to, a solid wood product, or an engineered wood product, that is identified in regulations adopted by the board pursuant to Section 4629.4. "Lumber product" does not include furniture, paper products, indoor flooring products such as hardwood or laminated flooring, bark or cork products, firewood, or other products not typically regarded as lumber products."

III. SUMMARY OF INTENT

1. Origin of the raw material is not considered in this regulation.
2. This is an assessment at the retail level on Lumber Products, as defined in statute.
3. These products are further defined by Board regulation, as outlined in this guide.
4. It is the intent of the law to assess lumber and items made from lumber. It does not assess items not typically regarded as lumber products.
5. Items not typically regarded as lumber products, but created from primary (Chapter 1) or secondary (Chapter 2) products as defined here, are known as "value created products" and are discussed in Chapter 4.

The following sections are intended as classification to distinguish products to be assessed under the Lumber Assessment. It follows the form of a "key", in that as you move from chapter to chapter, products receive further manufacturing that will define them as either assessable or not.

Forest Products → Non-timber Products

Ch. 1 ↓ Not assessed

Timber Products → Non-Lumber Products

Ch. 2 ↓ Assessed Not assessed

Primary Lumber Products

Ch. 3 ↓ Assessed

Secondary Lumber Products → Tertiary Lumber Products

Ch. 4 Assessed Value Created Products

Not assessed

DRAFT

Chapter 1- Forest Products

1. Forest Products- any material derived from a forest for commercial use, such as lumber, paper, or forage for livestock. Forest Products are of two types: timber and non-timber

   1.1. Timber Products- a forest product category that includes wood and pulpwood. They could be considered assessable timber products in certain instances**.** A debarked log of a given size, cut to a specified length, could be considered an assessable product if it is to be used in a log home or, following preservative treatment, as a utility pole. Fence posts are often just merely split and put into use. **Go to Chapter 2**

   1.2. Non-timber products- does not necessitate harvesting trees. It includes game animals, fur-bearers, nuts and seeds, berries, mushrooms, oils, foliage, medicinal plants, peat, fuelwood, forage. **These products are not assessed**.

Chapter 2- Timber Products

2. Timber Products

2.1. Primary Lumber Products- products include lumber, veneer and plywood, furniture, poles, piling, mine timbers, and posts; and composite wood products such as laminated timbers, insulation board, hardboard, and particle board. Other primary products which might be considered assessable include rustic siding, poles, fence boards, decking, timbers, ties, shingles/shakes, 3-sided house logs and so forth. **Go to Chapter 3.**

2.2. Non-lumber products (fiber)- fiber products are those which develop initially from the various processes for pulping wood. All are intended to separate the cellulose fibers one from another in relatively pure form to be recombined into layers of pulp, paper sheets, or paperboards. **These products are not assessed.**

Chapter 3- Lumber products

3. Secondary Lumber Products- More commonly, lumber undergoes additional (secondary) processing before being used. Green or partially air-dried lumber cut to specified sizes can go directly into products like pallets, shipping containers, crates, etc. Dry lumber can be used in framing (construction). Graded and planed it can be used as components for trusses, laminated beams and wood I-beams. (note: the following types of products, **if sold at retail, are to be assessed**. If not sold at retail, but are intended as a sale to a purchaser who will incorporate/manufacture/produce, etc., then resell the incorporated/manufactured/produced item prior to any use, **go to Chapter 4**).

   3.1. Lumber products- means a product in which wood or wood fiber is a principal component part, including, but not limited to, a solid wood product, or an engineered wood product that is identified in these regulations.

   All grades and dimensions of lumber, surfaced or rough,
   structural panels,
   cross-laminated timbers,
   decking,
   railings,
   fencing (poles, solid board),
   poles,
   roofing (shakes and wooden shingles),
   siding (beveled shingles, board and batten, log, tongue and groove, treated wood),
   sub-flooring.
   "Pole stake"
   Closure strips
   Lath
   Pine Door Jambs
   Load Bottom – made up of falldown 2x4 – 2x12, classified as lumber
   Recycled/salvaged lumber- if it is resold again at retail (i.e., there has been intervening use and not just held for display)
   Fencing and landscaping products
   Railroad ties
   Power poles
   Lodgpole pine
   Peeler poles
   Split cedar
   Treated round rail

3.2. Engineered products (note: highlighted items are specifically in statute)
Engineered Wood Product means wood composite products including inorganic-bonded and wood thermoplastic composites. It includes a range of derivative wood products which are manufactured by binding lumber or the strands, particles, fibers, or veneers of wood, in horizontal or longitudinal orientation together with adhesives, to form composite materials, in which wood is a principal component part as defined. This would include laminated counter top materials and finger jointed products also.

3.2.1. Composite products

plywood,
oriented strandboard,
particleboard,
fiberboard,
glued-laminated timber,
laminated veneer lumber,
laminated strand lumber,
oriented strand lumber,
parallel strand lumber,
hardboard,
waferboard,
flakeboard,
veneer-based sheeting material,
laminated beams,
I-joists,
edge-glued material.
Strong wall
Shear brace
iLevel Sheer Brace – similar to strong wall

3.2.2. Inorganic-bonded and wood thermoplastic composites: these include the following products in which wood or wood fiber is a “principal component part” which means at least ten percent (10%) of the total content by volume.

Gypsum-bonded composite materials (fiber reinforced gypsum),
cement-bonded composite materials,
ceramic bonded composite materials,

wood thermoplastic composite materials including plastic lumber and decking
Hardie Fiber Cement Siding

DRAFT

Chapter 4- Value Created Products

4. Tertiary Lumber Products, created from category 3 above- These products typically have significant craftsmanship that adds value to the product through labor. Additional processing can produce products like trim moulding, furniture parts, paneling and flooring. Anytime a raw material is handled, sorted, or in any way transformed, costs are incurred and it can be argued to be a value-adding process. It could be argued that converting low-grade, low-value utility logs into pulp is "value-added processing". Someone else may define the ultimate value-added product as a one of-a-kind piece of artwork that may take an artist weeks or months to produce and sell for thousands of dollars. In this instance we are looking at "value-created", as a way of distinguishing between value-added commodity products, which are assessed, and higher value wood products (like furniture) which are not assessed.

4.1. "Lumber Product" does not include furniture, paper products, indoor flooring products such as hardwood or laminated flooring, bark or cork products, firewood, or other products not typically regarded as lumber products. (note: highlighted items are specifically in statute). **The products below are not subject to assessment:**

4.1.1. Items excluded earlier in this key:
paper products (note: included in step 2.2 above)
bark or cork products (note: included in step 1.2 above),
firewood (note: included in step 1.2 above),

4.1.2. Items of a specific craftsmanship:
furniture,
indoor flooring products such as hardwood (solid or engineered) or laminate flooring,
cabinets,
windows,
window casings,
doors,

4.1.3. Decorative products
wainscoting, paneling, shutters, and blinds,
molding,
baseboards,
(note: these products have added profiling, patterns, chamfering, or other craftsmanship. It does not include lumber products that lack these characteristics)

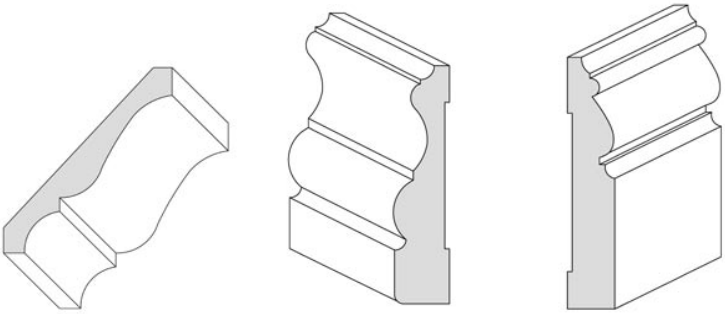

Example of Profiled pieces

Example of Chamfering

4.1.4. Tools and instruments:

musical instruments,
sporting goods and equipment,
signs,
tools,
tool handles,
ladders,
brooms,
frames,
kitchenware,
shims
garden stakes (*less than 1" x 2" and less than 48" in length, with a sharpened point for placement in the ground*)

4.1.5. Hobby and craft items

Craft kits such as bird house kits,
carvings and craft products,
non-lumber hobby wood
Burls

DRAFT

4.1.6. Pre-assembled, pre-constructed lumber sold in kits or packages- such products are usually precut, predrilled, or manufactured. They may be disassembled for shipment.

Wall panels/ panelized walls that are pre-assembled offsite

Lattice,
Pre-constructed railing sections,

Trusses,
Pre-fabrication housing (pre-cut buildings, pre-cut or fabricated components of buildings),
Pre-constructed fencing sections.
Shed kits
Log cabin kit
Deck Package
Picnic Table Kit
Crane mats

Double Cross Arms and Braces

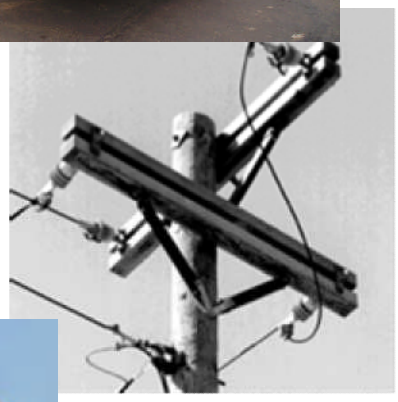

Shaft sets and guides

DRAFT

4.1.7. Miscellaneous

cooperage and treatment materials (including staves, storage vessels, and oak chips for wine, beer, and spirits),
Pallets
Bamboo fencing
Steel Strong Walls
Hardie Frames

DRAFT